NVX

VS-SERIES SUBWOOFERS

VSW82V2	VSW84V2
VSW102V2	VSW104V2
VSW122V2	VSW124V2
VSW152V2	VSW154V2

USER MANUAL

THANK YOU FOR CHOOSING NVX

Congratulations on the purchase of your new NVX subwoofer. The VS-Series V2 subwoofer you hold in your hands is the culmination of an extensive research, development and real world testing process. While this isn't the easiest way to build a sub, the time and personal attention we dedicate reflects in the quality and performance of the finished product. We are proud to build NVX subwoofers and are confident you will be proud to own one.

We have incorporated many features in the VS-Series V2 that will separate NVX from the competition. Utilizing our engineering strengths and woofer knowledge, we created VS-Series V2 to deliver amazing SQ (Sound Quality) and performance while providing the best value in its class.

SPECIFICATIONS

Model Number	VSW82V2	VSW84V2	VSW102V2	VSW104V2	VSW122V2	VSW124V2	VSW152V2	VSW154V2
Power Range (RMS)	250-400 Watts	250-400 Watts	350-500 Watts	350-500 Watts	450-600 Watts	450-600 Watts	600 - 750 Watts	600 - 750 Watts
Impedance per Voice Coil	2 Ohms	4 Ohms	2 Ohms	4 Ohms	2 Ohms	4 Ohms	2 Ohms	4 Ohms
Frequency Response	20-200 Hz	20-200 Hz	20-200 Hz	20-200 Hz	20-200 Hz	20-200 Hz	20 - 200 Hz	20 - 200 Hz
Xmax	9 mm	9 mm	11 mm	11 mm	12 mm	12 mm	12 mm	12 mm
Fs	53 Hz	53 Hz	30 Hz	30 Hz	25 Hz	25 Hz	23 Hz	23 Hz
Vas	6.65 L	6.65 L	27.73 L	27.73 L	66.24 L	66.24 L	179.78 L	179.78 L
Sd	20.11	20.11	33.00	33.00	49.08	49.08	85.50	85.50
Qts	0.595	0.595	0.476	0.476	0.396	0.396	0.489	0.489
SPL (1W/M)	85	85	87	87	90	90	92	92
QES	0.694	0.694	0.537	0.537	0.437	0.437	0.532	0.532
Net Weight	12.04 lbs (5.45 kg)	12.04 lbs (5.45 kg)	13.15 lbs (5.95 kg)	13.15 lbs (5.95 kg)	15.58 lbs (7.05 kg)	15.58 lbs (7.05 kg)	16.90 lbs (7.65 kg)	16.90 lbs (7.65 kg)

A Overall Diameter	8.50" (216 mm)	10.35" (263 mm)	12.44" (316 mm)	15.47" (393 mm)
B Mounting Diameter	7.82" (198.50 mm)	9.65" (245 mm)	11.63" (295.50 mm)	14.69" (373 mm)
C Cutout Diameter	7.20" (183 mm)	9.15" (236 mm)	11.12" (282.50 mm)	14.06" (357 mm)
D Mounting Depth	4.37" (111 mm)	5.00" (127 mm)	5.95" (151 mm)	6.83" (173.50 mm)

Results vary based on enclosure type and volume. ***See pages 4 and 5.***

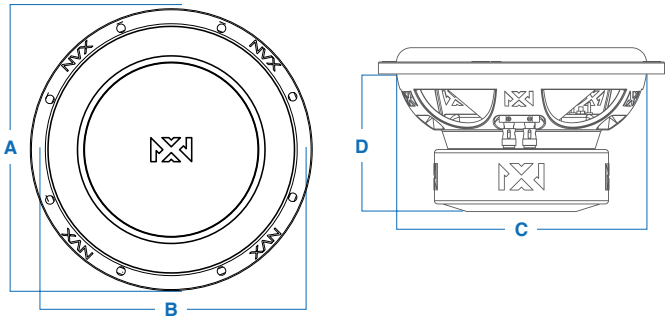

ENCLOSURES

The enclosure designs listed below will give you the best possible performance from your VS-Series V2 subwoofer. NVX subwoofers are optimized for use in both ported and sealed enclosures, each of which has distinct sonic characteristics.

PORTED BOX

Ported boxes are the enclosure type we recommend for optimum performance of your VS-Series V2 Subwoofer.

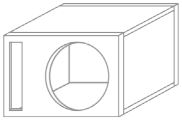

A ported box features a vent or port to couple the woofer's back-wave with the front-wave. This results in markedly improved efficiency and low frequency response.
These enclosures are somewhat larger than the sealed alternative.

Model Number	**VSW82V2/ VSW84V2**	**VSW102V2/ VSW104V2**	**VSW122V2/ VSW124V2**	**VSW152V2/ VSW154V2**
Recommended Enclosure Volume	0.65 ft.^{3}	0.70 ft.^{3}	1.75 ft.^{3}	2.75 ft.^{3}
Tuning Frequency	43 Hz	34 Hz	32 Hz	32 Hz
Ideal Power RMS	250 Watts	350 Watts	450 Watts	600 Watts
F3	39 Hz	29 Hz	31 Hz	35 Hz

SEALED BOXES

A sealed enclosure offers improved acoustic suspension and cone control, which reduces distortion and increases the power handling capabilities of the subwoofer. They are smaller than their ported counterparts, and offer flatter bass response with more consistency across the frequency range.

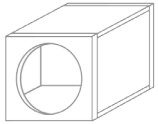

Model Number	**VSW82V2/ VSW84V2**	**VSW102V2/ VSW104V2**	**VSW122V2/ VSW124V2**	**VSW152V2/ VSW154V2**
Recommended Enclosure Volume	0.35 ft.^{3}	1.00 ft.^{3}	1.25 ft.^{3}	1.75 ft.^{3}
Ideal Power RMS	400 Watts	500 Watts	600 Watts	750 Watts
F3	64 Hz	45 Hz	55 Hz	39 Hz
FC	70 Hz	51 Hz	51 Hz	47 Hz
QTC	0.780	0.820	0.670	0.890

FEATURES

OPTIMIZED MOTOR STRUCTURE

To begin with, we used motor analysis tools to effectively create the needed force to drive the woofer in the most linear fashion. The BL (Motor Force) was optimized to allow the VS-Series V2 to operate in smaller sealed and ported enclosures. The VS Series V2 will reach its' performance potential in enclosures ranging from 0.35 cuft to 2.75 cuft., with a mounting depth as little as 4.50 inches.

ALUMINUM SHORTING RING

Perhaps the most distinguishing component of the VS-Series V2 subwoofers is the innovative aluminum shorting ring system. This technology prevents a rise in inductance caused by the movement of the driver, which has several positive impacts on the subwoofers' performance:

- Improved power delivery to the voice coil
- Decreased inductive distortion
- Improved cone linearity
- Improved high-end extension
- Decreased risk of overheating

WHAT IS THIS SHORTING RING?

The shorting ring is a conductive aluminum ring placed in the air gap between the pole piece and the voice coil former to reduce inductance. Inductance can best be understood as the change in magnetic energy that occurs as the voice coil moves in and out of the air gap. In most subwoofers this energy is absorbed by the voice coil, causing impedance rise, introducing distortion and reducing the woofer's ability to play at the top of the bass spectrum. In the VS-Series V2 subwoofers, the shorting ring simply absorbs changes in inductance, optimizing the sound quality, output potential and frequency response of the woofer.

SO WHY DOES IT WORK?

- Improved power delivery to the voice coil

  Any increase in inductance correlates to an increase in voice coil impedance, meaning increased resistance to the input power. By preventing inductance rise, we effectively increase the amount of power carried to the voice coil, increasing the output potential of the woofer with each given watt.

- Decreased inductive distortion

  When inductive energy is introduced into the motor structure, it causes the subwoofer to produce sounds and artifacts at higher frequencies around the 500-1,000 Hz range. Our Aluminum shorting ring absorbs these changes in inductive energy, resulting in crisp, distortion-free bass.

- Improved cone linearity

  A great deal of care was taken during the research and development process to ensure that the movement of the cone is as linear as possible. Since inductance is a change in magnetic energy, it's easy to see how undesired inductance can alter the movement of the cone. By using our shorting ring, we absorb these changes in magnetic flux and prevent modulation of the cone resulting in tighter, more accurate bass.

- Improved high-end extension

  The low-pass filter in a standard crossover network is basically just a coiled conductive wire with an iron core very similar to the design of a voice coil. When the inductance of the voice coil increases, it begins to filter out notes at the top of the woofer's frequency range. Our aluminum shorting ring eliminates these variations in inductance, allowing the woofer to play as it was intended.

- Decreased risk of overheating

  In addition to the positive impact the shorting ring has on the subwoofer's sound quality, it also acts as an effective heat sink to carry heat away from the voice coil, which contributes to improved performance and durability.

IF IT'S SO GREAT, WHY DON'T OTHERS USE IT?

Where we see an opportunity to build a better product, other manufacturers see an opportunity to maximize profits. Shorting rings require additional materials and add complexity to the manufacturing process. Rather than skimp on the shorting ring and make inferior woofers, we ultimately decided to create a masterpiece. The most experienced engineering team in the industry has painstakingly designed our VS-Series V2 subwoofers, and we firmly believe that you will hear the difference.

WARRANTY

NVX warrants to the original retail purchaser that this product is to be free from defective materials and workmanship for a period of one (1) year from the date of purchase, if it is properly used and maintained. If this product proves defective in either material or workmanship, NVX, at it's discretion, will (a) repair the product, or (b) replace the product, at no charge for parts or labor. If the product model is no longer available and cannot be repaired effectively or replaced with an identical model, NVX at it's sole option may replace the unit with a current model of equal or greater value. To obtain a repair or replacement under the terms of this warranty, please return to dealer first, if possible, and the dealer will direct you accordingly for repairs or replacement. You will be required to submit a copy of the original receipt. Return shipping for exchanges/repairs is the sole responsibility of the original retail purchaser.

LIMITATIONS:

- This limited warranty does not cover failure of the product resulting improper installation, misuse, abuse, accident, neglect, mishandling, or wear from ordinary use or environmental deterioration.
- This limited warranty does not cover cosmetic damage, including paint damage, or consequential damage to ordinary use or environmental deterioration.
- This limited warranty does not cover cosmetic damage, including paint damage, or consequential damage to other components or premises which may result for any reason from the failure of the product.
- This limited warranty is null and void for products not used in accordance with NVX's instructions.
- This limited warranty is null and void for products with altered or missing serial numbers and for products not purchased from an authorized dealer.
- This limited warranty terminates if you sell or otherwise transfer this product to another party.
- This limited warranty is null and void for any speaker or subwoofer that has been damaged due to over-powering causing burnt voice coils and /or mechanical failures such as ripped spiders or surrounds.

THIS WARRANTY GIVES YOU SPECIFIC LEGAL RIGHTS, AND YOU MAY ALSO HAVE OTHER RIGHTS WHICH VARY FROM STATE TO STATE, JURISDICTION TO JURISDICTION, OR COUNTRY TO COUNTRY. NVX'S RESPONSIBILITY FOR MALFUNCTIONS AND DEFECTS IN HARDWARE IS LIMITED TO REPLACEMENT OR REPAIR AS SET FORTH IN THIS WARRANTY STATEMENT. ALL EXPRESS AND IMPLIED WARRANTIES FOR THE PRODUCT, INCLUDING BUT NOT LIMITED TO ANY IMPLIED WARRANTIES OF MERCHANTABILITY AND FITNESS FOR A PARTICULAR PURPOSE, ARE LIMITED IN TIME TO THE TERM OF THIS WARRANTY. SOME STATES, JURISDICTIONS, OR COUNTRIES DO NOT ALLOW THE EXCLUSION OF CERTAIN IMPLIED WARRANTIES OR CONDITIONS, OR LIMITATIONS ON HOW LONG AN IMPLIED WARRANTY OR CONDITION LASTS, SO THIS LIMITATION MAY NOT APPLY TO YOU. NVX DOES NOT ACCEPT LIABILITY FOR SPECIAL, INDIRECT, CONSEQUENTIAL, OR INCIDENTAL DAMAGES, INCLUDING WITHOUT LIMITATION, ANY LIABILITY FOR THIRD PARTY CLAIMS AGAINST YOU FOR DAMAGES OR FOR PRODUCTS NOT BEING AVAILABLE FOR USE. THE MAXIMUM LIABILITY FOR WHICH NVX MAY BE RESPONSIBLE WILL BE NO MORE THAN THE AMOUNT YOU PAID FOR THE PRODUCT THAT IS THE SUBJECT OF THE CLAIM. SOME STATES, JURISDICTIONS, OR COUNTRIES DO NOT ALLOW THE EXCLUSION OR LIMITATION OF SPECIAL, INDIRECT, INCIDENTAL, OR CONSEQUENTIAL DAMAGES, SO THE ABOVE LIMITATION OR EXCLUSION MAY NOT APPLY TO YOU.

Warranty Outside the U.S.

The Warranty on this product shall comply with applicable law when sold to a consumer outside of the United States. To obtain any applicable warranty service, please contact the dealer from which you purchased this product, or the distributor that supplied this product.

WHAT TO DO IF YOU NEED WARRANTY OR SERVICE

Defective products should be returned to the place of purchase. Your authorized NVX dealer is trained to handle and expedite any warranty claim. Assistance in locating an authorized dealer can be found at **nvx.com** or by contacting NVX directly.

Alternatively, if it becomes necessary for you to return defective product directly to NVX, please refer to the following instructions for warranty service:

- Receive your RA Number from NVX online at **nvx.com/support**
- Package all defective components in the original packaging (if available) or in a package that will prevent shipping damage.
- Package the original packaging in an additional shipping container to avoid shipping damages and to comply with most shipping couriers such as UPS and FedEx.
- Insure your return at the price paid as NVX is not responsible for insurance losses or damages occurring in shipment to our facility.
- Clearly mark RA Number on the outside shipping container.
- Return only defective components as the return of functioning items increases your return freight charges.
  - Non-defective returns or products not eligible for warranty service will be returned freight collect.
- Include a copy of the original receipt with the purchase date clearly visible, and a “proof-of-purchase” statement listing the customer’s name, dealer’s name and invoice number, and product purchased.
  - Warranty expiration on items without proof-of-purchase will be determined from type of sale and the manufacturing date code.
- Ship your package freight prepaid to the address below. Items sent freight collect or COD will be refused.

NVX
Attn: Returns
10645 Freeport Dr.
Louisville, KY 40258-1873

Failure to follow the steps listed above may void your warranty. Any questions can be directed via email to **cs@nvx.com** or via mail at the address listed above.

RECOMMENDED PRODUCTS

AMPLIFIERS

MVPA

Micro-V Series 300W RMS Monoblock Class

Model Number	MVPA1*
RMS Power @ 14.4	200 Watts x 1 Ch @ 4 Ohm 300 Watts x 1 Ch @ 2 Ohm
Lowpass Filter	40 Hz - 400 Hz
Highpass Filter	—
Subsonic Filter	—
Height	1.56" (39 mm)
Length	5.44" (138 mm)
Width	4" (102 mm)

BDA750

BOOST 750W RMS Monoblock Class D Amplifier

Model Number	BDA7501*
RMS Power @ 14.4	450 Watts x 1 Ch @ 4 Ohm 750 Watts x 1 Ch @ 2 Ohm
Lowpass Filter	20 Hz - 500 Hz
Highpass Filter	—
Subsonic Filter	10 Hz - 50 Hz
Height	2" (50.8 mm)
Length	9.75" (247.65 mm)
Width	7" (177.8 mm)

JAD1200

JAD 1200W RMS, Class D Monoblock Amplifier

Model Number	JAD1200.1*
RMS Power @ 14.4	1200 Watts x 1 Ch @ 1 Ohm 800 Watts x 1 Ch @ 2 Ohm 500 Watts x 1 Ch @ 4 Ohm
Lowpass Filter	50 Hz - 200 Hz
Highpass Filter	—
Subsonic Filter	20 Hz - 38 Hz
Height	1.84" (46.70 mm)
Length	12.83" (326 mm)
Width	6.70" (170 mm)

SPEAKERS

V-Series Coaxial

2-Way V-Series Car Speakers with 25 mm Silk Dome Tweeters

V-Series Component

V-Series Car Speaker System with 25 mm Silk Dome Tweeters

Model Number	VSP4*	VSP525*	VSP60*	VSP65*	VSP68*	VSP69*	VSPTW*
Size	4"	5.25"	6"	6.50"	6" x 8"	6" x 9"	25 mm
RMS Power	60 Watts	90 Watts	100 Watts	100 Watts	130 Watts	200 Watts	20 Watts
Freq. Response	100 Hz - 20 kHz	80 Hz - 20 kHz	68 Hz - 20 kHz	70 Hz - 20 kHz	100 Hz - 20 kHz	68 Hz - 20 kHz	2 KHz - 20 kHz
Impedance	4 Ohm	4 Ohm	4 Ohm	4 Ohm	4 Ohm	4 Ohm	4 Ohm
Cone Composition	Polypropylene	Polypropylene	Polypropylene	Polypropylene	Polypropylene/ Carbon Fiber Blend	Polypropylene/ Carbon Fiber Blend	Silk Dome
Overall Diameter	5.11" (130 mm)	5.90" (150 mm)	6.49" (165 mm)	6.49" (165 mm)	8.03" x 5.74" (204 mm x 146 mm)	9.25" x 6.49" (235 mm x 165 mm)	2.40" (61 mm)
Mounting Depth	2.04" (52 mm)	2.04" (52 mm)	2.51" (64 mm)	2.51" (64 mm)	2.59" (66 mm)	3.14" (80 mm)	3.14" (80 mm)

Kit Model Number	VSP52KIT*	VSP65KIT*
Midbass Drivers	VSP525	VSP65
Tweeters	VSPTW	VSPTW
Crossover Network	—	—

* Specifications are subject to change without notice

NOTES

Authorized Dealer's Name: _____

Purchase Date: _____

Model Number: _____

Serial Number: _____

NVX

Visit: nvx.com | Call: 213.444.1689 | 15303 Ventura Blvd. 9th Floor, Sherman Oaks, CA 91403